O'Sullivan, P. E., 1983. Annually-laminated lake sediments and the study of Quaternary environmental changes; a review. *Quaternary Science Reviews*, **1**, 245–313.
Peterson, L. C., Haug, G. H., Hughen, K. A., and Roehl, U., 2000. Rapid changes in the hydrologic cycle of the tropical Atlantic during the last glacial. *Science*, **290**, 1947–1951.
Pike, J., and Kemp, A. E. S., 1996. Preparation and analysis techniques for studies of laminated sediments. In Kemp, A. E. S. (ed.), *Palaeoclimatology and Palaeoceanography from Laminated Sediments*, Special Publication, Geological Society of London. Vol. **116**, pp. 37–48.
Retelle, M. J., and Child, J. K., 1996. Suspended sediment transport and deposition in a high arctic meromictic lake. *Journal of Paleolimnology*, **16**, 151–167.
Rittenour, T. M., Brigham-Grette, J., and Mann, M. E., 2000. El Nino-like climate teleconnections in New England during the late Pleistocene. *Science*, **288**, 1039–1042.
Saarnisto, M., 1986. Annually laminated lake sediments. In Berglund, B. E. (ed.), *Handbook of Holocene Palaeocology and Palaeohydrology*. John Wiley and Sons, pp. 343–370.
Schultz, H., von Rad, U., and Erlenkeuser, H., 1998. Correlation between Arabian Sea and Greenland climate oscillations of the past 110,000 years. *Nature*, **393**, 54–57.
Wohlfarth et al. (1998). *The Holocene*, **8**, 521–534.
Zolitschka, B., 1996. Recent sedimentation in a high arctic lake, northern Ellesmere Island, Canada. *Journal of Paleolimnology*, **16**, 169–186.

Cross-references

^{210}Pb Dating
Lacustrine Environments (^{14}C)
Radiocarbon Dating
Sedimentary Rocks (Rb-Sr Geochronology)

MASS SPECTROMETRY

James B. Paces[1], Dominique Weis[2] and Trevor R. Ireland[3]
[1]Geosciences and Environmental Change Science Center, U.S. Geological Survey, Denver, CO, USA
[2]Department of Earth, Ocean, and Atmospheric Sciences, Pacific Centre for Isotopic and Geochemical Research, The University of British Columbia, Vancouver, BC, Canada
[3]Research School of Earth Sciences, The Australian National University, Canberra, Australia

Definition

Any of a number of methods used to determine the spectrum of isotopic abundances in a given material based on the measurement of relative masses of atoms or molecules present in that material. As applied to scientific dating, mass spectrometry is most commonly used to determine abundances of parent and progeny isotopes in naturally radioactive decay systems that have half-lives of geological relevance (years to billions of years).

Introduction

Scientific methods for dating materials of geological interest commonly utilize natural radioactive isotopes that spontaneously transform to progeny isotopes at constant and well-known rates of decay. In order to use this property to estimate absolute ages, it is essential to accurately determine the abundances of both parent and progeny isotopes in a mineral or rock sample that has remained closed to isotopic exchange with its surroundings since its formation. Decay counting can be used to quantify abundances of short-lived radioactive isotopes. However, for radioactive isotopes with half-lives longer than a few thousand to tens of thousands of years, only a small number of atoms undergo radioactive decay during the counting period resulting in poor precision of isotope abundances. Furthermore, a number of geochronometers rely on stable, albeit radiogenic, progeny which cannot be measured by decay counting. Therefore, isotope ratios are more commonly determined by mass spectrometry where potentially all of the atoms present in the sample can be counted. Geochronological methods using K-Ar, Rb-Sr, Sm-Nd, Lu-Hf, Re-Os, U-Pb, and U-Th decay schemes take advantage of atom counting by mass spectrometry to provide precise measurements of relative isotope abundance. Other methods for measuring mass ratios exist; however, this entry focuses on mass spectrometric methods that are most commonly employed in geochronological studies.

Determination of isotope ratios by mass spectrometry involves:

(1) introduction of the sample into the mass spectrometer either as a gas, liquid, or solid and ionization of the element or elements of interest,
(2) separation of ions on the basis of their mass-to-charge ratios, and
(3) detection of those ions by measuring currents for large signals or by ion counting for smaller ones.

Methods by which material is introduced and ionized allow mass spectrometers to be classified into different types, each of which has strengths and weaknesses. However, all methods take advantage of the physical response of moving charged particles through a strong electromagnetic field and conversion of the beam of separated ions into an electronic signal that is directly proportional to the number of atoms detected. Output takes the form of a mass spectrum of peak intensities that are indicative of the relative abundances of isotopes present in the sample, which can then be interpreted to represent age information through application of various decay schemes and dating models. More detailed explanations of the general principles and various methods of mass spectrometry are readily available (Faure, 1986; Goldstein and Stirling, 2003; Dickin, 2005; Faure and Mensing, 2005; Gross, 2011; Ireland, 2013; White, 2013).

History

The initial development of mass spectrometry closely followed the discovery of radioactivity in the middle to late 1890s. The first demonstration that isotopes could

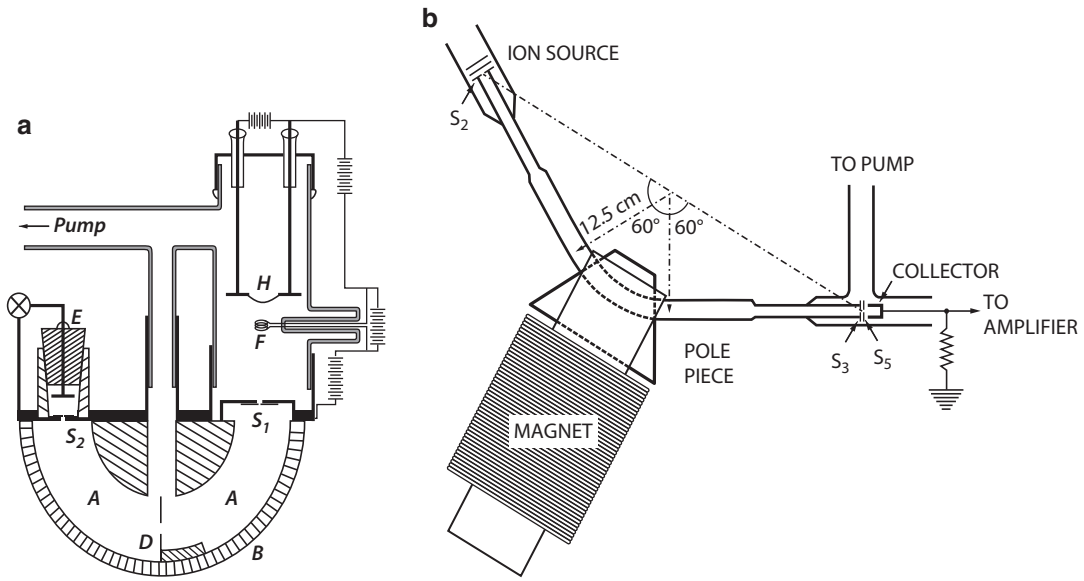

Mass Spectrometry, Figure 1 Historical mass spectrometer designs. (**a**) Cross-sectional schematic of Dempster's first thermal ionization instrument which included an analyzer chamber *A*, constructed from a brass tube fitted with iron plates *B*, an entrance slit *S1*, exit slit *S2*, and defining aperture *D*. The source consisted of an electron-emitting filament *F* and a heating element *H*. Ion currents were detected by the electrometer fitted in an ebonite plug, *E* (Figure modified after Dempster, 1918). (**b**) Cross-sectional schematic of Nier's 1940 thermal ionization mass spectrometer consisting of widely separated source and collector whose slits *S2* and *S3*, respectively, are collinear with the center of curvature of the flight tube (Modified after Figure 2 of Nier, 1940). The flight tube passed through a 60° magnetic sector analyzer and had a length of 58 cm between *S2* and *S3*. The basic design has remained similar after more than 70 years of improvements.

be separated on the basis of their masses came in 1913 when J.J. Thomson constructed a spectrometer at the University of Cambridge Cavendish Laboratory that used a photographic emulsion to show that neon gas produced two spectral lines of differing intensities representing ^{20}Ne (90.48 %) and ^{22}Ne (9.25 %). Modifications of the original design made shortly thereafter by A.J. Dempster at the University of Chicago in 1918 and F.W. Aston at the Cavendish Laboratory in 1919 included addition of 180° sector magnetic fields enabling directional refocusing, separate thermal ionization filaments to produce and accelerate ions, source and exit slits to better refine the ion beam, and a separate electric field to remove the velocity spread and yield point images (Figure 1a). Even though early instruments had low-mass resolution and sensitivity, they were capable of identifying all of the naturally occurring isotopes of the light elements as well as their relative abundances.

In 1940, Alfred Nier at the University of Minnesota revolutionized mass spectrometry by developing a design that utilized a 60° sector-field magnet and moved the ion source and ion collectors away from the influence of the electromagnet (Figure 1b; Nier, 1940; De Laeter and Kurz, 2006). Nier also completely redesigned the ion source and introduced the electronic measurement of ion beams. These fundamental changes made production and operation of magnetic sector mass spectrometers more efficient and reliable and opened the field of isotope geosciences far beyond the initial scope imagined by earlier physicists. Many modern instruments still use Nier's designs.

Subsequent improvements in mass spectrometer performance are more related to incorporation of digital operation and control, refinement of various electronic and vacuum technologies, and innovation in sample introduction into the ion source. Improvements in instrumentation coupled with the use of clean-laboratory conditions to minimize contamination were stimulated by the lunar sample return missions in the late 1960s and early 1970s and the accompanying interest in understanding solar system evolution by studying meteorites with low elemental abundances for many of the geochronological systems. The development of the plasma source coupled to a multicollector magnetic sector system represented another major wave of improvements in the mid-1990s, allowing the measurement of isotopic ratios for nearly any element in the periodic table.

Principles of mass spectrometry

Mass spectrometers are designed to separate ions based on their mass-to-charge ratio. To do this, atoms or molecules of interest in a sample must become charged forming an ion cloud, extracted from that cloud by applying an acceleration voltage (typically 1–10 kV), and focused into a narrow beam using a series of source plates that constitute the ion optics of the instrument. Ions in the accelerated

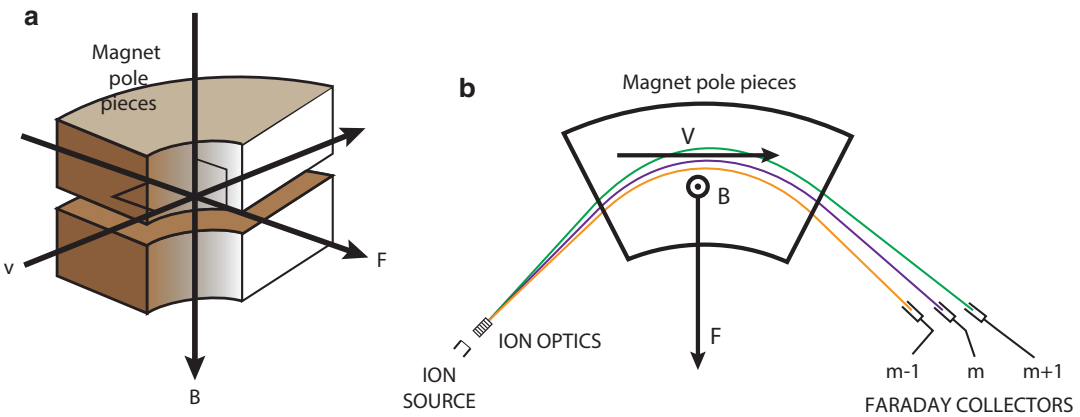

Mass Spectrometry, Figure 2 Diagram depicting the Lorentz force law operating in magnetic sector mass analyzers. (**a**) Oblique schematic view of the magnetic pole pieces designed to provide a uniform magnetic field *B*. The resulting force (*F*) operates at right angles to both the ion velocity vector (*v*) and the magnetic field vector (B) at any point along the flight path. (**b**) Plan view showing the paths of ions of different masses (*m*) affected by the Lorentz force to different degrees. Ions with heavier masses (*m* + *1*) follow less curved paths than ions with lighter masses (*m*−*1*).

beam have kinetic energy that is equal to the electrostatic field produced in the source ($\frac{1}{2}\ mv^2 = qV_E/d$; where m = mass, v = velocity, q = charge, V_E = extraction voltage; and d = distance over which the acceleration takes place). The beam thus produced is introduced into a mass analyzer where dispersion takes place using magnetic fields (magnetic sector instruments), rapidly cycling electric fields (quadrupole instruments), or velocity selection (time-of-flight instruments).

Magnetic sector instruments

An ion with mass and charge traveling at velocity through a uniform magnetic field (B) will experience a centripetal force that imparts a circular motion. As a result the ion will follow a curved path having a radius (R) within a plane perpendicular to the magnetic field ($F = qvB = mv^2/R$). Magnetic sector mass spectrometers take advantage of this principle (Lorentz law) by using electromagnets specifically designed to produce a homogeneous field that is positioned at right angles to the path of the ion beam (Figure 2). Ions traveling through the magnetic field will follow an arc with a radius proportional to its mass ($R = mv/qB$). As other factors are held constant, ions of different masses follow paths with different radii through the magnetic field, with heavier ions being deflected less than lighter ones.

To steer beams of lighter and heavier ions into the collector slit on a single-collector spectrometer, either the magnetic field or the velocity of the ions (via changes to V_E) can be varied to alter the radius of curvature via the Lorentz law. In practice, the magnetic field is more precisely monitored using a Hall probe that senses the field strength and adjusts the magnet power supply as necessary (Dickin, 2005). In multicollector instruments, a number of faraday cups and ion counters are positioned to simultaneously measure multiple dispersed beams, thus avoiding temporal variability in the signal due to ion beam instabilities. Recent advances in magnet design feature poles set at oblique angles to the exiting beam in order to use fringing fields for better focusing. Because this design also increases the distance from the magnet to the ion focal point, it is referred to as "extended geometry." This design allows increased ion transmission and greater dispersion, which, in turn, facilitates additional collectors. Ion transmission in magnetic sector instruments can be close to 100 %, whereas multiple-sector instruments commonly have lower transmission.

High-precision measurement of isotope ratios needed for geochronology requires that magnetic sector mass spectrometers maintain very high vacuum throughout the ion path in order to avoid reduced velocities or loss caused by inelastic collisions with ambient air molecules. Pressures within the flight tube (ion path between the source and collector) typically are between 10^{-9} and 10^{-8} mbar. High vacuum is maintained by continuous pumping using a combination of turbo pumps (momentum transfer pump that uses high-speed rotating blades to capture gas molecules) backed by positive displacement mechanical pumps, cryotraps (cold fingers), and ion getters (entrapment pump that uses electrical fields to ionize gas molecules that are then captured on a charged solid substrate).

Quadrupole instruments

Although magnetic sector mass spectrometry is the most common method used for measurements of high-precision isotope ratios, dispersion of isotopes on the basis of mass-to-charge ratios also can be accomplished by applying electric fields to two pairs of metal electrodes forming a quadrupole mass analyzer (Miller and Denton, 1986). Opposing pairs of rods are electrically connected, and a combination of fixed DC and alternating RF (radio frequency) potentials are applied such that two rods have

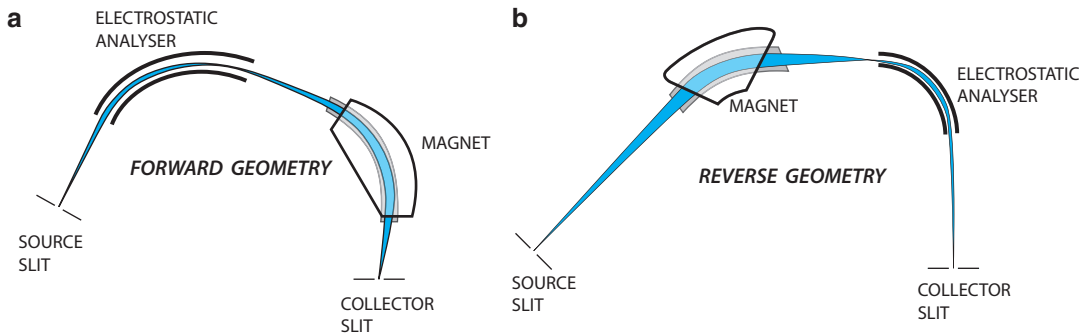

Mass Spectrometry, Figure 3 Schematic depictions showing the ion beam paths (in *blue*) passing through two types of double-focusing mass spectrometers. Designs employ both magnetic sector analyzers for mass dispersion and electrostatic analyzers (*ESA*) to compensate for energy dispersion inherent in inductively coupled plasma and secondary ion sources. (**a**) Forward geometry where the magnetic sector precedes the ESA and (**b**) reverse geometry where the ESA precedes the magnetic sector (Modified after Figure 3 of Ireland (2013)).

oscillating positive and negative voltages. Ions are extracted from an inductively coupled Ar plasma source and introduced at one end of the quadrupole. Oscillations of charges on the electrodes cause complex ion trajectories where only ions with the proper mass-to-charge ratio for a given set of voltages can traverse the length of the quadrupole. All other ions will have unstable trajectories and be neutralized by collisions with the electrodes. Ions that enter the collector slit at the far end of the quadrupole are measured as described above.

Quadrupole mass spectrometers benefit from the ability to switch masses very quickly allowing collection of data from the entire periodic table during a single, rapid analysis. They require only modest vacuum conditions and are not as complex or costly as magnetic sector instruments. These attributes allow quadrupole instruments to excel in determination of elemental concentrations in either solution mode or attached to a laser ablation system. However, quadrupole instruments are not as sensitive nor as stable as magnetic sector instruments and are typically operated at unit mass resolution, which typically restricts their use to low-resolution applications (Gross, 2011). Therefore, they cannot produce the same level of high-precision, isotope–ratio data compared to magnetic sector instruments and are not widely used in geochronological studies.

Time-of-flight instruments

Time-of-flight (TOF) mass analysis relies on the fact that heavier ions are accelerated more slowly than lighter ions of the same charge in the same potential field. TOF instruments are designed to measure differences in arrival times of ions that are generated during a discrete event. In practice, a group of ions is typically generated using a pulsed laser shot, a pulsed beam of primary ions, or a pulse generator coupled with a plasma source. Mass separation is accomplished in the flight tube as ions in the pulse are separated into individual packets defined by mass number. Additional mass dispersion can be accomplished by extending the path length through incorporation of reflection geometries.

Time-of-flight analysis has been primarily used to produce elemental and molecular maps of solid surfaces as well as depth profiles in material-science applications. Benefits include a theoretically unrestricted mass limit, analysis of a complete mass range for a single ionization pulse, high ion transmission, and extremely small sample requirements ($<10^{-18}$ mol). However, time-of-flight analyses generally do not produce fully quantitative data and, as such, have not yet been used to produce geochronological information.

Double-focusing instruments

Production of ions in mass spectrometers using plasma sources or secondary ion sources results in ions with a range of kinetic energies as well as mass-to-charge ratios. Dispersal of ion energy results in poor mass resolution due to beam spread and increased tailing. In order to narrow the spread of ion energies and improve mass resolution, both an electrostatic analyzer (ESA) and a magnetic sector analyzer are used in series, resulting in a double-focusing mass spectrometer (Figure 3). The ESA consists of a set of two concentric curved plates held at different potentials to filter and focus the ions traveling through them, regardless of their mass. The ESA may be placed before (forward geometry) or after (reverse geometry) the magnetic sector. The use of double-focusing designs is critical for obtaining the high-precision measurements required for geochronological studies when using plasma source instruments or ion microprobes; however, an ESA is not required for thermal ionization instruments (see descriptions of different mass spectrometers below).

Other types of tandem geometries have been employed, including double- or triple-focusing designs with multiple magnetic sectors (de Hoffman, 1996). These designs result in increased abundance sensitivity and high selectivity but suffer from increased complexity, cost, and transmission losses.

Mass Spectrometry, Table 1 Distribution of masses steered to different collectors that have been positioned at single atomic mass unit spacing for three types of data collection (dynamic peak jumping, static multicollection, and multi-dynamic triple jumping) for Sr-isotopic compositions (^{84}Sr, ^{86}Sr, ^{87}Sr, and ^{88}Sr) while monitoring ^{85}Rb to correct mass 87 for ^{87}Rb

		Collector number						
Analysis type	Magnet jump	Lo-3	Lo-2	Lo-1	Axial	Hi-1	Hi-2	Hi-3
Dynamic peak jumping	1	–	–	–	84	–	–	–
	2	–	–	–	85	–	–	–
	3	–	–	–	**86**	–	–	–
	4	–	–	–	**87**	–	–	–
	5	–	–	–	88	–	–	–
Static multicollection	1	–	–	84	85	**86**	**87**	88
Multi-dynamic triple jumping	1	–	–	84	85	**86**	**87**	88
	2	–	84	85	**86**	**87**	88	–
	3	84	85	**86**	**87**	88	–	–

Ion detection

Two general types of detectors are commonly used to measure ion-beam intensity. For large beam currents up to 10^{-10} A, a deep, narrow faraday cup positioned behind the collector slit captures the incoming ions. The incident ions are neutralized by electrons from the ground that flow through a large resistor (10^{10}–10^{12} Ω). The potential across the resistor is amplified and read by a digital voltmeter. Signals of several millivolts up to 50 V can be reliably measured using faraday cups.

At lower ion beam currents, electrical noise becomes a substantial component of the total signal present in the cups. In order to measure beam currents smaller than about 10^{-13} A, collectors that use signal multiplication are needed. The two types most commonly employed are Daly detectors and secondary electron multipliers (SEMs). A Daly detector consists of a polished metal "knob" placed under a large negative potential (Daly, 1960). Incoming positively charged ions are attracted to the knob and, upon impact, release a shower of secondary electrons. These electrons are accelerated toward a nearby positively charged phosphor screen where they generate light pulses that are amplified and measured by a sensitive photomultiplier. SEMs consist of either discrete-dynode or continuous-dynode (channeltron) designs that rely on secondary electron emission after initial collision of an ion on the dynode surface (Allen, 1947; Poenisch, 1976). Release of additional electrons causes a cascade effect, multiplying the initial collision by gain factors of 10^4–10^8 (Gross, 2011). Electrical output for Daly and SEM detectors is typically given in counts per second that must be calibrated (at least at the upper end of the range) against voltages produced for the same beam on a faraday cup.

Charge-coupled device (CCD) detectors, a relatively new type of silicon-based electronic device capable of detecting multichannel arrays of electromagnetic radiation, are capable of measuring impinging ion currents and have been used as detectors on miniaturized spectrometers (Sinha et al., 2011). However, these detectors have not yet been incorporated into instruments used for high-precision geochronological work.

Data collection

Data collection in modern computer-controlled mass spectrometers involves measurement of multiple scan cycles in order to attain high-precision results. Single-collector instruments require magnet cycling from low to high-mass, counting intensities at each mass (and background positions) before returning to the low-mass peak to repeat the cycle. This form of analysis is referred to as dynamic peak-jumping mode and requires stable ion beam intensities to achieve precise isotope ratios. Multicollector instruments running in static mode do not require changes in magnet current and can therefore tolerate short-term beam instability because ion beams for all masses of interest are measured simultaneously. Static multicollection methods still gather data in separate blocks that allow statistical treatment and correction for instrument drift and beam growth or decay. However, static multicollection requires that corrections for electronic biases between detectors and amplifiers must be made by running collector gain calibrations with some frequency. Alternatively, high-precision measurements can be made on multicollector instruments using a multi-dynamic analysis that involves double or triple magnet jumps that measure the same isotope ratios in sequential sets of collectors. This method is capable of canceling out beam growth or decay, correcting for collector/amplifier bias, and applying a power law mass fractionation correction. An example of these three types of data collection schemes intended to determine the isotopic composition of Sr is shown in Table 1. Total length of analysis time depends on signal intensity and desired precision but can take from a few minutes to several hours for the highest-precision results. A variety of other corrections are necessary to produce the most precise and accurate data including baseline subtraction, detector linearity, and isobaric interference.

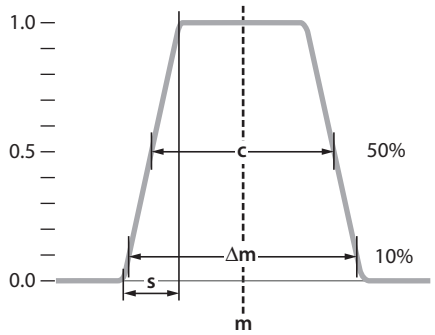

Mass Spectrometry, Figure 4 Schematic depiction of an instrumental scan across an isotope of mass *m*, showing a trapezoidal-shaped peak with a flat top at a fractional intensity of 1 (*thick*, *gray line*). Peak width measured at 50 % of the peak height represents the collector slit width (*c*) and the width of the peak slope (*s*) represents the width of the demagnified source slit. Mass resolution at the 10 % peak height is given by m/Δm (Modified after Figure 6 of Ireland (2013).

Mass resolution

One of the main performance considerations in mass spectrometry is the ability of an instrument to distinguish two peaks having different mass-to-charge ratios. This is easier for lower-mass elements where differences in isotope masses are large relative to total mass, but becomes increasingly difficult for high-mass elements or for different species having similar masses (for instance, ^{29}Si vs. ^{28}Si^{1}H or ^{87}Rb vs. ^{87}Sr). Mass resolution is specified as the overall mass under consideration divided by the difference between masses being considered (m/Δm). For instance, a mass spectrometer needs a mass resolution of only 87 to resolve ^{86}Sr from ^{87}Sr (87/[86.9089-85.9083]) but a value of about 3,500 to resolve ^{29}Si from ^{28}Si^{1}H (29/[28.9765-28.9848]) and more than 200,000 to resolve ^{87}Rb from ^{87}Sr (87/[86.9092-86.9089]). Modern magnetic sector mass spectrometers have mass resolutions ranging from 300 to more than 5,000.

Mass resolution can be determined by noting the Δm for the closest spacing of two, equal-intensity peaks separated by a minimum signal less than a specified fraction of peak height (typically 10 % or 50 %). A more common and easily measured determination of mass resolution uses the width of a peak (in Δm) measured at a stated fraction of the peak height (commonly at 1 %, 10 %, or 50 %, the latter of which yields full width at half maximum, or FWHM; Figure 4). Ideally, peaks obtained by scanning the ion beam across the collector slit will have flat tops and steeply sloping sides that allow minor mass drift without affecting ion beam intensity. Width at the base of the peak is approximately the sum of the widths of the source and collector slits, whereas the width of the peak flat is related to the ratio of the collector slit width to the ion beam width. A narrower collector slit will result in higher mass resolution, but will reduce the width of the peak flat. Reducing the width of the source slit will also result in higher mass resolution along with increased peak flat, but will cause a reduction of ion beam transmission. Therefore, mass resolution is often a compromise between the ability to effectively separate peaks with similar masses and the ability to acquire high-precision isotope data from those peaks.

A concept related to mass resolution is the amount that the tail of one peak may contribute to the signal of an adjacent peak. This measure is called abundance sensitivity and represents the ratio of the maximum ion current measured at a specified mass divided by the maximum ion current present for the same species measured at an adjacent mass. It is commonly measured at mass 237 (no natural isotope) while running a large ^{238}U signal. Tails arise from collision of ions in the flight tube with residual gas molecules resulting in a loss of energy and a shift toward the lower-mass side of the peak. Abundance sensitivity is therefore related to the quality of the vacuum in the instrument. Flight tube pressures in the low 10^{-9} mbar range commonly yield abundance sensitivities of ~0.000002 (2 ppm), although this can be improved by up to two orders of magnitude by addition of an energy filter in front of the collector or by designs incorporating multiple magnetic sectors.

Chemical separations

In order to reduce the number of isobaric interferences and to improve precision and reproducibility of the measurements, samples used for geochronological purposes are commonly reduced to pure chemical forms using cryogenic separation for noble gases (Ar) or liquid chromatography after acid digestion for solids. Only the purified elements of interest are then introduced into the ion source of the mass spectrometer, reducing or eliminating interferences associated with complex matrices typical of geologic material. Consequently, mass resolution requirements are simplified to unit mass differences, and isobaric interferences from combinations of lower-mass molecules are dramatically reduced.

Chemical separations are usually performed under cleanroom conditions involving highly filtered airflow and the use highly refined reagents. Cleanroom conditions are designed to reduce the potential contaminants added during processing, which in turn results in reduced amounts of materials not present in the original sample (known as "blank"). Low chemical processing blanks allow more accurate analysis of substantially smaller-sized samples, which facilitates dating of rocks using isochrons derived from mineral separates, or when total sample size is very limited. Analysis of solid materials (rocks and minerals) requires quantitative digestion using high-purity hydrofluoric, nitric, and hydrochloric acids. Complete dissolution of a known amount of sample allows the addition of a "spike" consisting of a solution containing a known amount of purified tracer isotope. Once the tracer is isotopically equilibrated with the sample, it can be used to monitor and correct for mass

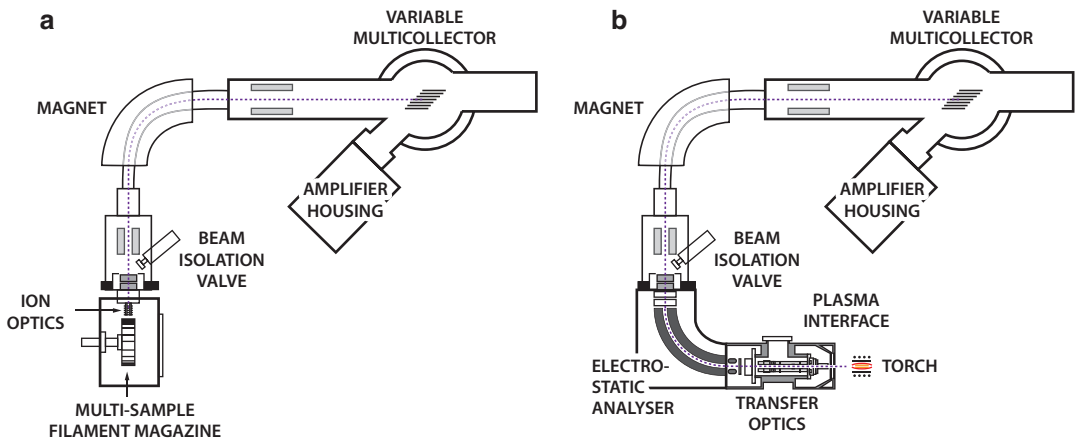

Mass Spectrometry, Figure 5 Schematic diagram depicting designs of modern commercially available magnetic sector instruments consisting of a single-focusing solid-source thermal ionization mass spectrometer (**a**), and a double-focusing inductively coupled plasma mass spectrometer with forward geometry (**b**). Note that the two instruments are identical past the beam isolation value (Diagrams courtesy of Thermo Fisher Scientific, Inc.).

fractionation that occurs during the isotope analysis or for quantifying the concentration of the element of interest in an unknown through a procedure known as isotope dilution (Dickin, 2005; Faure and Mensing, 2005).

Mass spectrometry used for dating

Principles described above are common to a variety of mass spectrometers used to collect isotope ratios for geochronological purposes. The following groupings are largely based on differences in how ions are produced. Comparisons between these mass spectrometric methods applied to radiogenic elements used for dating rocks and minerals can be found in a number of textbooks and review articles (Goldstein and Stirling, 2003; Faure and Mensing, 2005; Dickin, 2005; Siebel and van den Haute, 2007; Ireland, 2013).

Thermal ionization mass spectrometry

Thermal ionization mass spectrometry (TIMS) relies on thermal energy to produce ions from a sample placed on a thin ribbon (filament) of a highly purified refractory metal. Solid samples are prepared by acid digestion followed by chemical separation processes that are specific to the individual elements of interest. After separation, the resulting purified salt is loaded as a small drop of liquid onto a filament of rhenium, tantalum, or tungsten, either by itself or along with an activator such as Si-gel, Ta-oxide, or carbon suspension that helps stabilize or enhance ion emission. Depending on the ionization characteristics of a given element, samples can be loaded onto a single filament that produces both evaporation and ionization or on double- or triple-filament assemblies where separate filaments control evaporation and ionization. Loaded filaments are placed in the TIMS source, which is evacuated to pressures of ~10^{-8} mbar, and then heated by passing a current of about 1–5 A. Heating under these conditions yields filament temperatures of 800–3,500 °C, which is sufficient to cause sample evaporation and at least partial ionization of a number of elements. Ions are extracted from the evaporation cloud in front of the filaments and accelerated through the source optics into the mass analyzer (Figure 5a).

TIMS analyses of natural, nonvolatile radioactive isotope systems have been the historical standard in geochronology studies for more than 60 years. This includes dating systems such as U-Pb, Rb-Sr, Sm-Nd, and more recently Lu-Hf, Re-Os (in negative-ion mode), and U-Th disequilibrium studies. Advantages of TIMS analyses are in part derived from the careful chemical preparation which reduces mass-resolution requirements. The fact that different elements evaporate at different temperatures can also be used as an advantage for eliminating unwanted interferences to a certain extent (i.e., removal of ^{87}Rb at low temperature prior to analysis of ^{87}Sr at higher temperature) or for combined runs from the same filament (i.e., single-grain zircon or opal dating with no chemical separation where Pb data are collected at low temperature, U at intermediate temperature, and Th at high temperature). Thermal ionization also results in ions with a low energy spread allowing TIMS instruments to be relatively simple, relying only on single-focusing designs (magnetic sector). The main disadvantage of TIMS is that many elements have low to very low ionization efficiencies resulting in detection of only a small fraction of the total atoms present on the filament. Variations in matrix composition can also affect sample chemistry, resulting in poor ionization for impure separates. These shortcomings can be overcome by improving chemical separations and, in some cases, by adding an enhancer to the filament along with the sample load to increase the ionization efficiency without adding blank. TIMS analysis times are lengthy (several hours to obtain the highest-precision results), and total throughput can be low due to arduous chemical preparations.

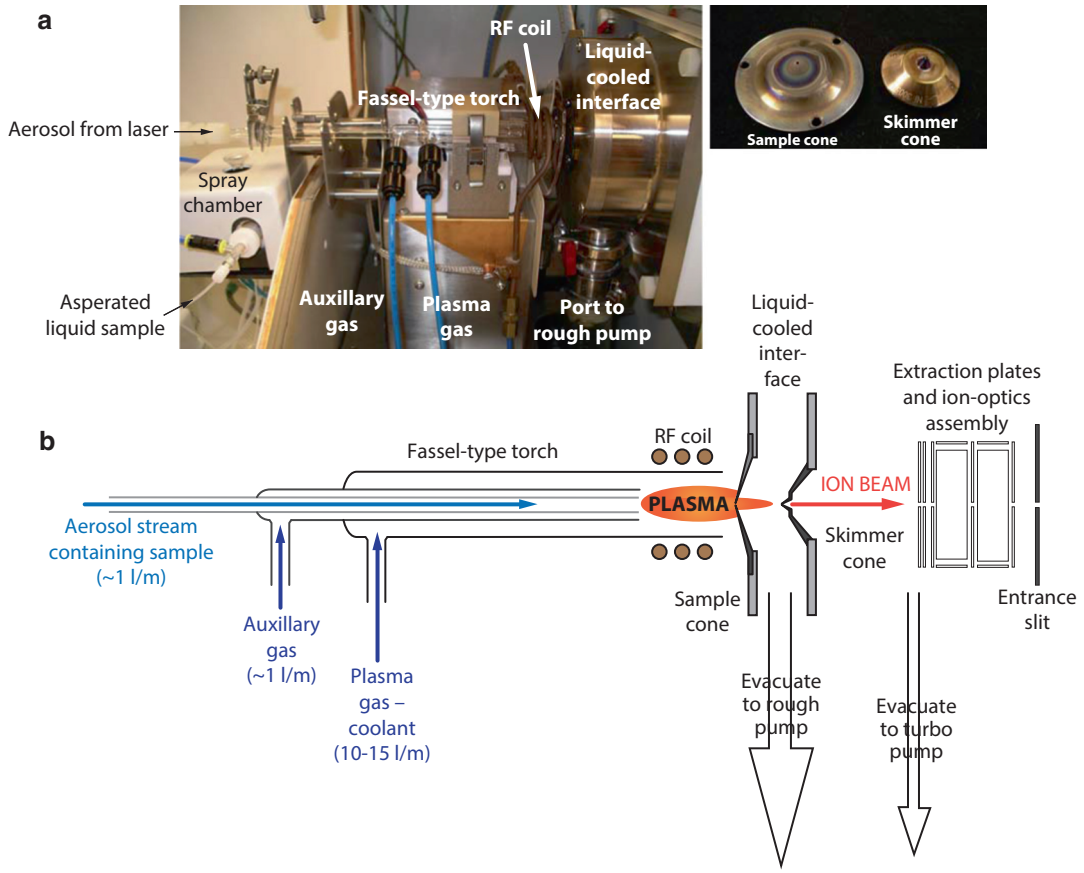

Mass Spectrometry, Figure 6 (**a**) Photograph of the source area of an inductively coupled plasma mass spectrometer showing the layout of major components (*left*) and the sample and skimmer cones (*right*) which are attached to the liquid-cooled interface. (**b**) Schematic diagram of the main components shown in photograph (**a**).

Inductively coupled plasma mass spectrometry

Inductively coupled plasma–mass spectrometry (ICP–MS) uses a plasma source utilizing Ar as the plasma support gas (Figure 6). A Fassel-type torch with automated radio-frequency matching allows the aerosol gas to punch a hole through the plasma. The Fassel torch uses relatively low gas flow and can be used for aqueous samples using either a peristaltic pump or Meinhard nebulizer, or, for "dry" samples from which most of the liquid has been removed, by desolvation using a microconcentric nebulizer. The nebulizer converts the solution into an aerosol that, while passing through the plasma source, is desolvated, dissociated, and ionized. The interface region of the instrument usually consists of two cones, separated by a very small distance that is being pumped by a rough pump. The whole interface region is made from material that dissipates heat easily such as copper or aluminum that is also cooled by circulating chilled water to reduce the effects of the high-temperature plasma (up to 8,000 °K) on the cones. The first cone, known as the sampler cone, typically has an orifice of 0.8–1.2 mm internal diameter, while the second cone, the skimmer cone, has a much smaller orifice (0.4–0.8 mm). The cones are usually made of Ni, although different materials, such a Pt, can be used depending on the element being ionized and the aggressiveness of the matrix. The role of the interface region is to transport the ions efficiently, consistently, and with electrical integrity from the plasma, at atmospheric pressure, to the mass spectrometer analyzer region, where pressure is at ~10^{-7} or ~10^{-8} mbar. When the ions emerge from the skimmer cones, they are directed through the ion optics that will focus the beam into the analyzer region of the mass spectrometer (Figure 5b).

The advantage of the ICP source is that it can ionize nearly all elements in the periodic system, and when combined with a multicollector system as described above, it allows for the measurement of isotopic compositions of many more elements than TIMS methods, especially those that are difficult to ionize by thermal methods. This opened up the analysis of many useful systems in geochronology, such as Al-Mg, Fe-Ni, Mn-Cr, Pd-Ag, and Hf-W as well as allowing for more precise analysis of Hf and Pb isotopic compositions.

The ICP source can also be coupled to a laser ablation (LA) system that allows in situ production of ions while

imaging the sampling process (Košler and Sylvester, 2003; Longerich, 2008; Koch and Günther, 2011). LA–ICP–MS has been used extensively for U-Pb dating of zircons, as well as on other mineral matrices when a detailed understanding of sample texture and composition is required. Laser ablation adds more complexity to ICP–MS systems such as the effects of laser wavelength and pulse length on formation of aerosols, processes of elemental fractionation during lasing and in the vapor stream, adequacy of reference materials and calibration of the system using age standards, sampling strategies and analytical protocols, and data collection and reduction strategies (see numerous chapters in Sylvester, 2008). Despite these complexities, LA–ICP–MS represents a successful and powerful dating tool with a growing number of applications.

There are strong matrix effects in ICP–MS that tend to reduce the reproducibility and accuracy of the analysis. To overcome this disadvantage, the element of interest can be carefully separated from its matrix through ion exchange while insuring a maximum yield (>95 %) through the process. The major limiting factor on the precision of multicollector-ICP–MS isotopic analyses stems from the instability of the plasma. An ESA is used to clean up the energy dispersion inherent in the plasma source and make it match the dispersion of the sector analyzer. In addition, mass fractionation associated with ionization in the ICP source is significantly larger than that observed in TIMS. However, instrument-induced mass biases are usually constant during the analyses allowing for proper correction, either by sample-standard bracketing or by the addition of another element of comparable mass range such as Tl to monitor Pb mass bias. Finally, because the ICP source is capable of ionizing all constituents introduced into the plasma, corrections for spectral interferences that may overlap the masses of interest must be made.

Noble gas mass spectrometry

Radiogenic noble gases including ^{4}He and ^{40}Ar can reside within certain minerals over geologic time scales and are often used in research applying geochronology and thermochronology. Noble gas mass spectrometry requires extraction and purification of exceedingly small fractions of gas from mineral grains under ultrahigh vacuum systems and is generally done using a high-temperature furnace or infrared laser. Heating can be done incrementally, such that gas fractions having different isotopic compositions can be separated. In some cases, step heating may provide information constraining the thermal evolution of the sample. Gases released from minerals during heating are isolated using chemical and cryogenic traps. The noble gas of interest is introduced into a gas-source mass spectrometer through an inlet port. Positive ions are created when the gas interacts with a heated filament causing ejection of an outer electron, and the resulting ions are accelerated through the source optics into a single-focusing magnetic sector mass spectrometer. The noble gas isotopes are typically measured in static mode.

Secondary ion mass spectrometry

Secondary ion mass spectrometers (SIMS) were developed to provide in situ elemental and isotopic compositions on samples at high spatial resolution (Ireland et al., 2008). To do this, a primary beam of energetic ions is focused onto a small spot on the sample (typically 10–50 μm). Bombardment of the sample surface causes ablation and generates a variety of metal ions and more complex species that can be extracted to form a secondary ion beam. Chemically active elements, such as O^{-} and Cs^{+}, are most commonly used for the primary beam because of their enhanced ability to generate secondary ions. Because secondary ions generated in this manner have a large range of both energies and mass-to-charge ratios, SIMS instruments employ a dual-focusing design with either forward or reverse geometries (Figure 3). They also require high-mass resolution in order to discriminate between numerous secondary ion species that may have similar masses. To accomplish this, these instruments employ large magnetic and electrostatic sectors and long flight paths.

In the last 30 years, SIMS analyses of the U and Pb isotopic compositions of zircon have become a critical tool for dating igneous and metamorphic rocks and for providing age data used in sedimentary provenance studies. Although individual ages are not as precisely determined as those analyzed by TIMS, SIMS has the distinct advantage of being able to analyze distinct spatial domains within a single grain that may be related to separate geological events. Furthermore, in situ SIMS analyses eliminate the involved and time-consuming step of chemical processing required by TIMS. Additional elements can be added as part of the same SIMS spot analysis (i.e., rare-earth and high-field-strength elements in zircon) allowing petrologic interpretations to accompany age data (petrochronology). Other minerals besides zircon have been dated using SIMS by both U-Pb and U-series methods (monazite, xenotime, titanite, baddeleyite, rutile, and opal). Unlike LA–ICP–MS, the SIMS primary beam is used both to sample the target and to simultaneously generate ions from resulting volume. The SIMS "sputtering" process is much less aggressive than vaporization via laser ablation and evacuates sample volumes that are only several micrometers rather than several tens of micrometers deep. Consequently, SIMS analyses require longer data acquisition times but are less likely to incorporate zones of disparately aged material at depth. Mass-dependent fractionation is also less pronounced in SIMS analyses, and isotope ratios require less elaborate correction procedures.

Summary

Over the last 100 years, mass spectrometry has become a critical aspect of geological science by providing ages from isotope–ratio measurements of natural radioactive decay. Mass spectrometry has also provided isotopic compositions of a myriad of solids, liquids, and gases that have

been invaluable for understanding earth science processes, the rates at which they occur, and the characterization of the compositions of numerous geochemical reservoirs.

Mass spectrometry is based on the principle that charged particles moving through electromagnetic fields are affected in ways that allow the dispersion of ions of different masses into separate signals that can be measured independently. All mass spectrometers consist of three main components: (1) a source of ions and a means of imparting velocity, (2) a mass analyzer that separates the moving ions on the basis of their mass-to-charge ratios, and (3) a collector system that can quantify the intensity of separated ion beams. Most mass spectrometers used for geochronological studies must be able to produce high-precision isotope–ratio measurements of stable ion beams and therefore make use of a magnetic sector mass analyzer. Because it is possible to generate ions and introduce them into the mass analyzer by various means, several types of mass spectrometers have been developed. These instruments can provide precise and accurate measurements on a wide range of isotope systems using a spectrum of different materials and analytical strategies.

Bibliography

Allen, J.S., 1947. An improved electron multiplier particle counter. *Review of Scientific Instruments*, **18**, 739–749, doi:10.1063/1.1740838#blank. http://dx.doi.org/10.1063/1.1740838

Daly, N. R., 1960. Scintillation type mass spectrometer ion detector. *Review of Scientific Instruments*, **31**, 264–267.

de Hoffman, E., 1996. Tandem mass spectrometry: a primer. *Journal of Mass Spectrometry*, **31**, 129–137.

De Laeter, J., and Kurz, M. D., 2006. Alfred Nier and the sector field mass spectrometer. *Journal of Mass Spectrometry*, **41**, 847–854.

Dempster, A. J., 1918. A new method of positive ray analysis. *Physical Review*, **11**, 316–325.

Dickin, A. P., 2005. *Radiogenic Isotope Geology*, 2nd edn. Cambridge, UK: Cambridge University Press, 452 p.

Faure, G., 1986. *Principles of Isotope Geology*, 2nd edn. New York: Wiley, 589 p.

Faure, G., and Mensing, T. M., 2005. *Isotopes – Principles and Applications*, 3rd edn. New York: Wiley, 897 p.

Goldstein, S. J., and Stirling, C. H., 2003. Techniques for measuring uranium-series nuclides: 1992–2002. In Bourdon, B., Henderson, G. M., Lundstrom, C. C., and Turner, S. P. (eds.), *Uranium-Series Geochemistry*. Washington, DC: Mineralogical Society of America. Reviews of Mineralogy and Geochemistry, Vol. 52, pp. 533–576.

Gross, J. H., 2011. *Mass Spectrometry*, 2nd edn. Berlin/Heidelberg: Springer, 754 p.

Ireland, T. R., 2013. Invited review article: recent developments in isotope-ratio mass spectrometry for geochemistry and cosmochemistry. *Review of Scientific Instruments*, **84**, 011101, 21 p.

Ireland, T. R., Clement, S., Compston, W., Foster, J. J., Holden, P., Jenkins, B., Lanc, P., Schram, N., and Williams, I. S., 2008. The development of SHRIMP. *Australian Journal of Earth Sciences*, **55**, 937–954.

Koch, J., and Günther, D., 2011. Review of the state-of the-art of laser ablation inductively coupled plasma mass spectrometry. *Applied Spectroscopy*, **65**, 155A–162A.

Košler, J., and Sylvester, P. J., 2003. Present trends and future of zircon in geochronology: laser ablation ICPMS. In Hanchar, J. M., and Hoskin, P. W. O. (eds.), *Zircon*. Washington, DC: Mineralogical Society of America. Reviews in Mineralogy and Geochemistry, Vol. 53, pp. 243–275.

Longerich, H., 2008. Laser ablation-inductively coupled plasma-mass spectrometry (LA-ICP-MS); an introduction. In Sylvester, P. J. (ed.), *Laser Ablation-ICP-MS in the Earth Sciences, Current Practices and Outstanding Issues*. Vancouver: Mineralogical Association of Canada. Mineralogical Association of Canada, Short Course Series, Vol. 40, pp. 1–18.

Miller, P. E., and Denton, M. B., 1986. The quadrupole mass filter: basic operating concepts. *Journal of Chemical Education*, **63**, 617–622.

Nier, A. O., 1940. A mass spectrometer for routine isotope abundance measurements. *Review of Scientific Instruments*, **11**, 212–216.

Poenisch, A., 1976. Mass-spectrometer electron-multiplier improvement. *Journal of Vacuum Science and Technology*, **13**, 1110–1112, doi:10.1116/1.569086#Link. http://dx.doi.org/10.1116/1.569086

Siebel, W., and van den Haute, P., 2007. Radiometric dating and tracing. In Nagy, S. (ed.), *Radiochemistry and Nuclear Chemistry, Encyclopedia of Life Support Systems, Developed Under the Auspices of the UNESCO*. Oxford, UK: Eolss Publishers. http://www.eolss.net/sample-chapters/c06/e6-104-02.pdf

Sinha, M. P., Neidholdt, E. L., Hurowitz, J., Sturhahn, W., Beard, B., and Hecht, M. H., 2011. Laser ablation-miniature mass spectrometer for elemental and isotopic analysis of rocks. *Review of Scientific Instruments*, **82**, 094102, doi:10.1063/1.3626794, 7 p.

Sylvester, P. J. (ed.), 2008. *Laser Ablation-ICP-MS in the Earth Sciences, Current Practices and Outstanding Issues*. Vancouver: Mineralogical Association of Canada. Mineralogical Association of Canada, Short Course Series, Vol. 40, 348 p.

White, W. M., 2013. *Geochemistry*. Chichester, UK: Wiley-Blackwell, Wiley, 668 p.

Cross-references

Accelerator Mass Spectrometry
Ar–Ar and K–Ar Dating
Historical Development of Dating Methods
Laser Ablation Inductively Coupled Mass Spectrometer (LA ICP-MS)
Lu-Hf Dating: The Lu-Hf Isotope System
Noble Gas Mass Spectrometer
Rhenium–Osmium Dating (Meteorites)
Rubidium–Strontium Dating, Hydrothermal Events
Secondary Ion Mass Spectrometry (SIMS)
Sm–Nd Dating
Thermal Ionization Mass Spectrometer (TIMS)
U-Series Dating
U–Th/He Dating
Uranium–Lead Dating

METAMORPHIC TERRANES (K–Ar/^{40}Ar/^{39}Ar)

Jan R. Wijbrans
Department of Earth Sciences, Faculty of Earth and Life Sciences, VU University, Amsterdam, The Netherlands

Synonyms

Metamorphic basement; Metamorphic belts

http://www.springer.com/978-94-007-6303-6

Encyclopedia of Scientific Dating Methods
Rink, W.J.; Thompson, J.W. (Eds.)
2015, XXIX, 978 p. 375 illus., 260 illus. in color. In 2 volumes, not available separately., Hardcover
ISBN: 978-94-007-6303-6